Pirate Treasure Hunt

Colour me in!

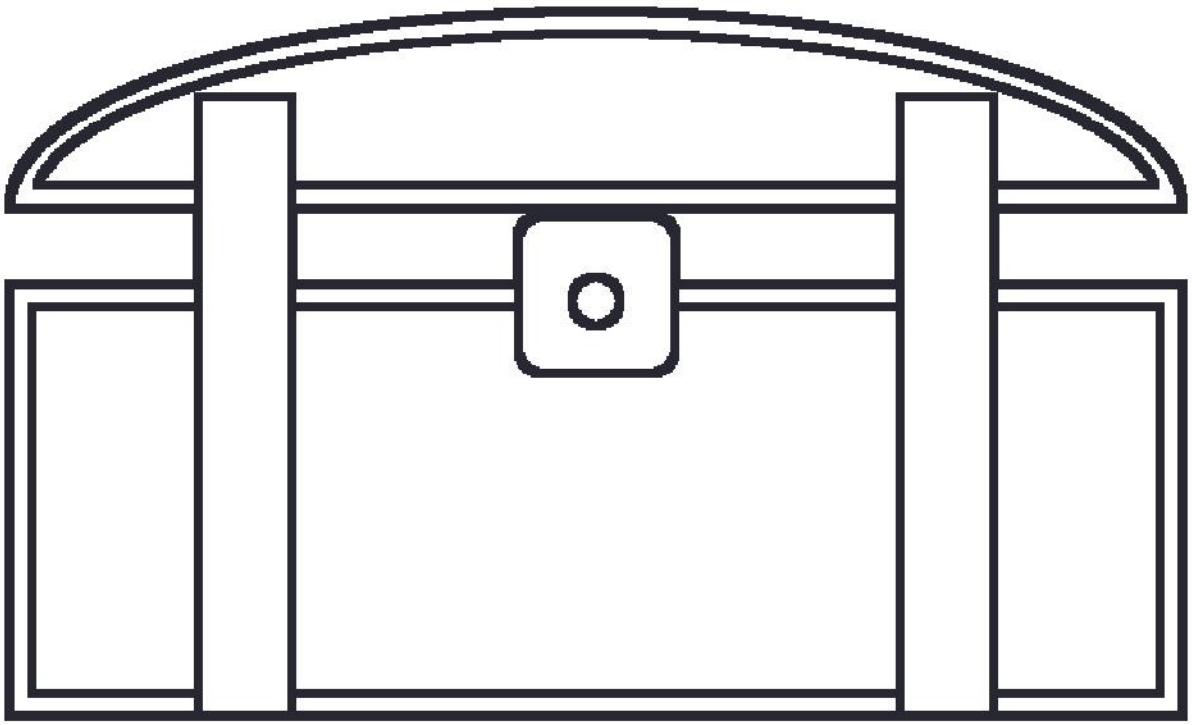

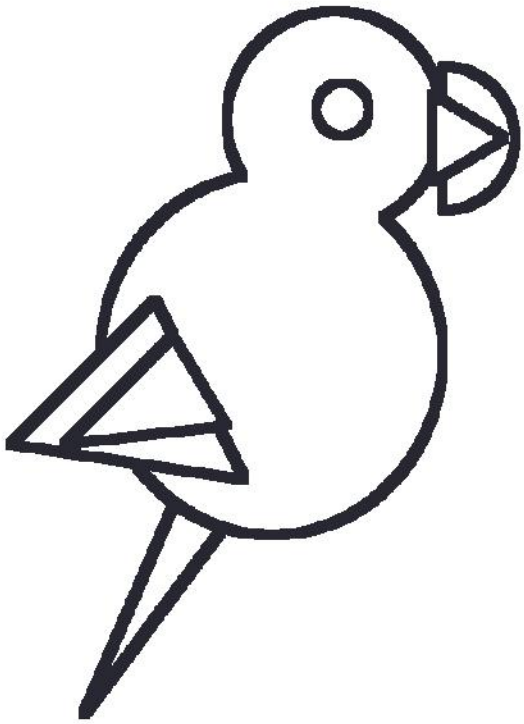

Pirate Treasure Hunt

Count them, then circle the number!

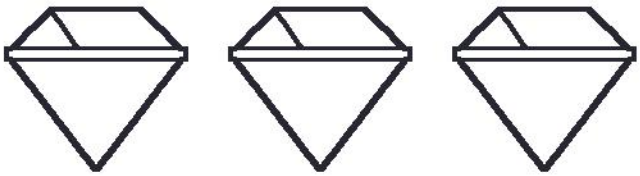

1 2 3

4 5 6

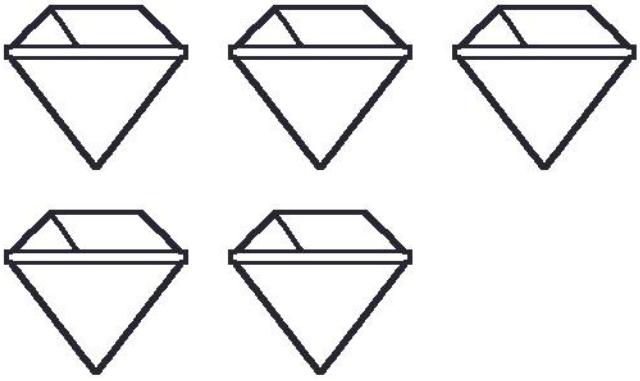

1 2 3

4 5 6

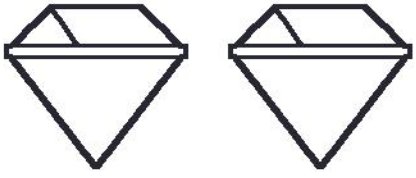

1 2 3

4 5 6

